MATERIAL NO.	ENG NO.	A	B	C	D	E	F	G	H	I	J	K	L	"M"	STOPPER	APPLICABLE HSG	COLOR
684210030	68421-0030	13.0	16.0	20.0	6.5	8.0	14.0	22.5	6.5	21.5	30.0	6.5	13.5	Ë‰6.5À¢6.5 HOLE	Y AXIS	35150-0210	TRANSPARENCY
684210040	68421-0040	16.0	17.0	23.5	9.0	17.0	24.0	31.5	9.0	29.5	39.5	7.5	14.5	Ë‰9.0À¢9.0 HOLE	Y AXIS	35180-0400	TRANSPARENCY
684210050	68421-0050	24.0	29.0	33.0	10.0	17.0	25.5	36.0	10.0	38.0	49.0	7.5	15.0	Ë‰10.0À¢10.0 HOLE	Y AXIS	35180-0600	TRANSPARENCY
684210034	68421-0034	17.5	18.0	24.5	10.0	13.5	20.5	31.0	10.0	27.7	40.0	9.0	13.5	Ë‰10.0À¢10.0 HOLE	X AXIS	35150-0410	BLUE
684210044	68421-0044	22.8	22.7	26.7	10.5	18.0	22.0	31.5	10.5	31.5	40.5	8.7	12.5	Ë‰10.5À¢10.5 HOLE	Y AXIS	35150-0610	BLUE

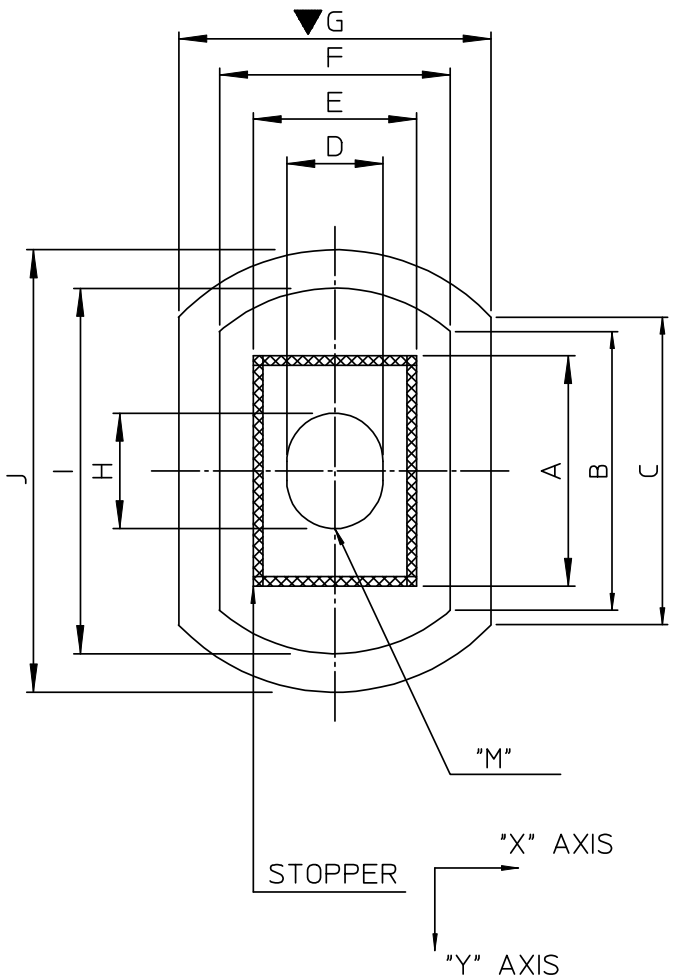

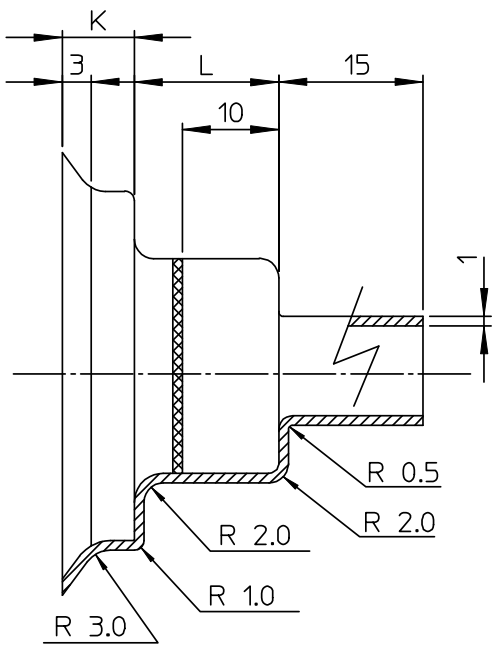

NOTES

1. MATERIAL : SF-PVC (UL 105Àè)

REVISED
EC NO: KOR2008-0170 2008/04/21
DRWN:JHPARK01 2008/04/21
CH'KD:WY. YANG 2008/04/22
APPR:YUNSIKKIM
DESCRIPTION
REV B

QUALITY SYMBOLS
▼=0
Ⓒ=0

GENERAL TOLERANCES (UNLESS SPECIFIED)

	mm	INCH
4 PLACES	± ---	± ---
3 PLACES	± ---	± ---
2 PLACES	± 0.25	± ---
1 PLACE	± 0.20	± ---
ANGULAR ± 1 °		

DRAFT WHERE APPLICABLE MUST REMAIN WITHIN DIMENSIONS

DIMENSION STYLE: MM ONLY
SCALE: 2:1
DESIGN UNITS: METRIC
THIRD ANGLE PROJECTION

DRAWN BY: JB. JIN DATE: 2002/05/03
CHECKED BY: WY. YANG DATE: 2002/05/03
APPROVED BY: CW. LEE DATE: 2002/05/03

TITLE: SLEEVE FOR HOUSING (35150,35180)

molex MOLEX INCORPORATED

MATERIAL NO.: SEE TABLE
DOCUMENT NO.: SD-68421-001
SHEET NO.: 1 OF 01
SIZE: A3

THIS DRAWING CONTAINS INFORMATION THAT IS PROPRIETARY TO MOLEX INCORPORATED AND SHOULD NOT BE USED WITHOUT WRITTEN PERMISSION